DOLPHIN



D321.L

DOLPHIN THRU PANEL MOUNTED LIQUID SOAP DISPENSER

INSTALLATION AND MAINTENANCE GUIDE

PRODUCT CODES

DS321.L.125 › 125mm Projection

DS321.L.150 › 150mm Projection

DS321.L.175 › 175mm Projection

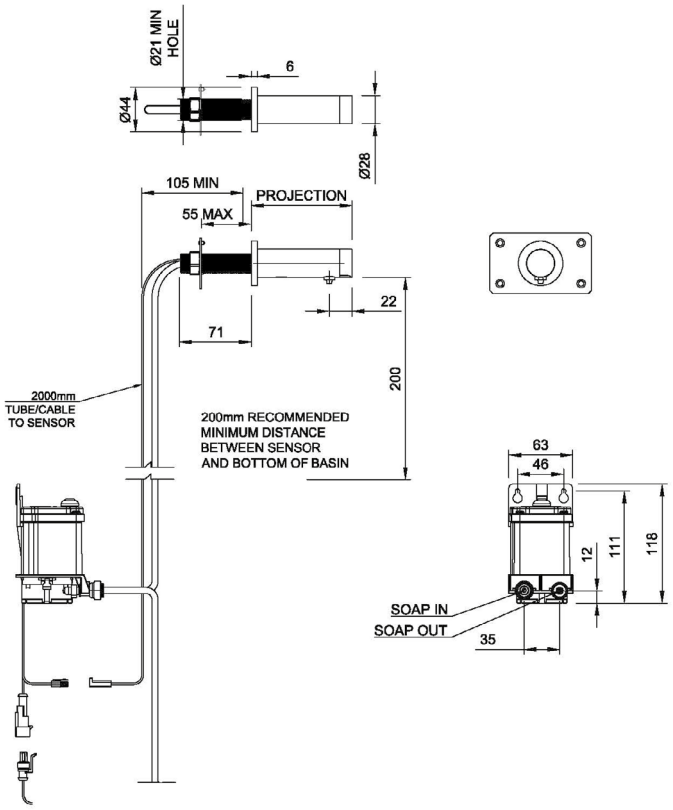

TECHNICAL DATA

- Dolphin Thru Panel Mounted Straight Body Liquid Soap Dispenser
- Manufactured from high-quality, highly durable 1.4401 (316) Marine grade stainless steel.
- Self-Monitoring Analysis and Recording Technology (SMART allows the Facilities Manager to connect point to point via the Dolphin SMART App when used with the optional Bluetooth Adaptor (Sold separately -Order product code 26040)
- Infra-Red Touch Free Soap Dispenser for ultimate hygiene prevents cross contamination Sensor mounted in end of spout
- Power Supply: See page 6 for power supply and other option
- Nominal Current: Less than 1mA (Less than 25mA with Bluetooth)
- Nominal Power: Less than 1W
- Security Time can be adjusted via the App Default 20 Seconds (60 Seconds max)

PRODUCT CODES

DS321.L.125 › 125mm Projection
DS321.L.150 › 150mm Projection
DS321.L.175 › 175mm Projection

CODING EXPLAINED

STYLE

DS321.F for Foam
DS321.L for Liquid

PROJECTION

DS321.X.XXX.X

FINISH

1 Brushed Satin
2 Mirror Polished
3 PVD Brushed
4 PVD Mirror
5 Powder Coated
6 Ceramic Coated
DS321.X.XXX.X

COLOUR

Suffix to end of code
(Number allocated by Dolphin Solutions)

EXAMPLE CODING

DS321.L.150.1
150mm Projection
Brushed Satin Finish

OPTIONS

Bluetooth
PVD
Powder Coating

PACK CONTENTS OF DS321.L

1. Body
2. Spout Nozzle
3. Rosette
4. Washer
5. Sensor Cap
6. Sensor Adaptor
7. M3x6 Grub Screws
8. Nut
9. M2.5x10mm Screw
10. M5x6 Grub Screw
11. M5x5 Grub Screw
12. Clear Tube
13. Tail

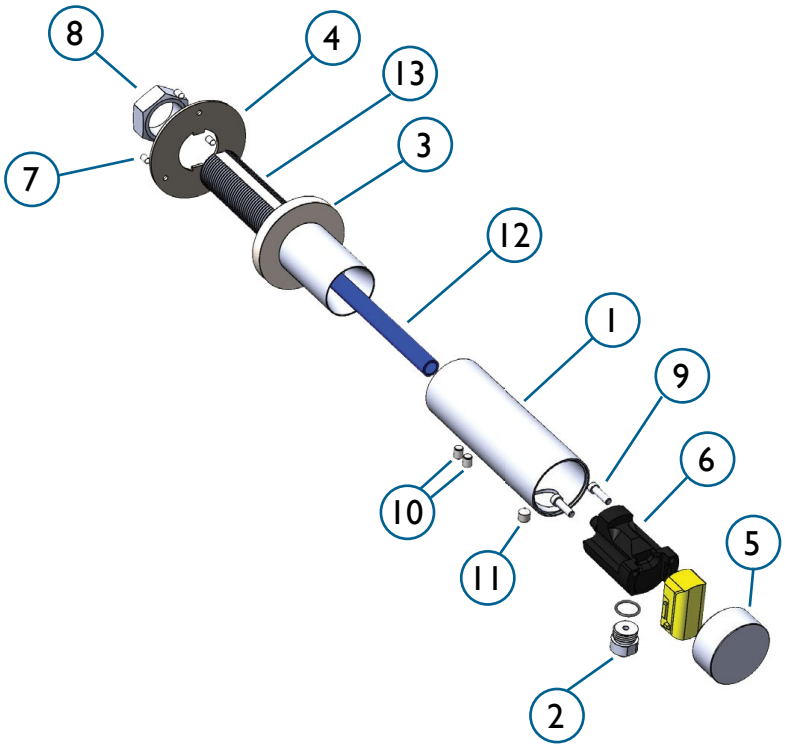

OPTIONS

✔ ? Order 26040 separately

PRE INSTALLATION

- Where possible check that all the components in the list above are present and that they are in good condition before installation. If any components are missing contact Dolphin Solutions.
- It is very important to allow permanent access to the mounting tail/nut of this product for future servicing and repair. Where this is not possible see our wall plate mounted products.

⚠WARNING

- Highly reflective surfaces directly beneath the sensor of this product, in particular polished finish basin wastes/strainers, will cause false activation of the infrared sensors and can result in malfunction. We recommend Satin or Matt finish products which can be found on our website.
- Sitting water may also cause the tap to activate
- All Electrical installation must be carried out by a qualified person and in accordance with applicable codes and regulations.
- Do not kink the supply hoses.

INSTALLATION

Step 1

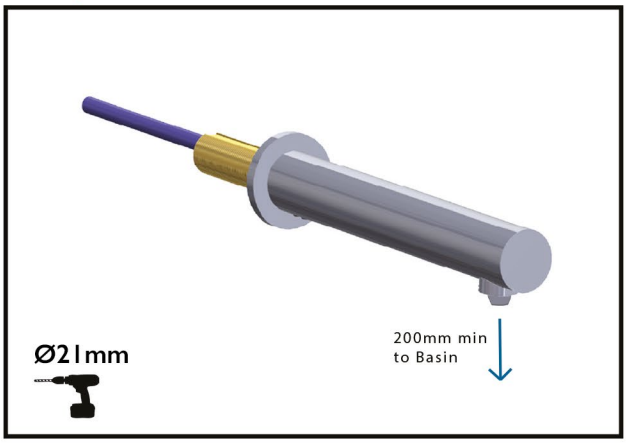

Step 2

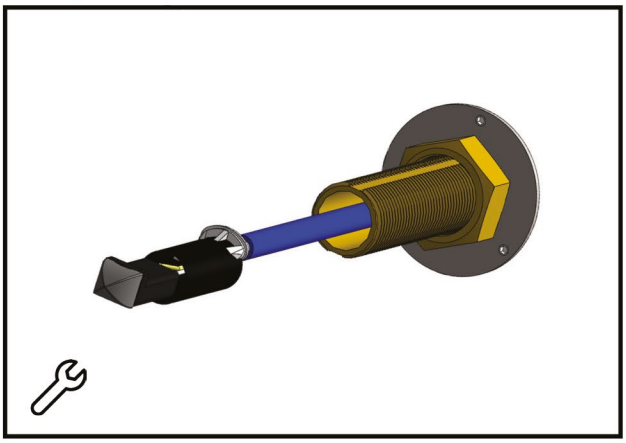

Step 3

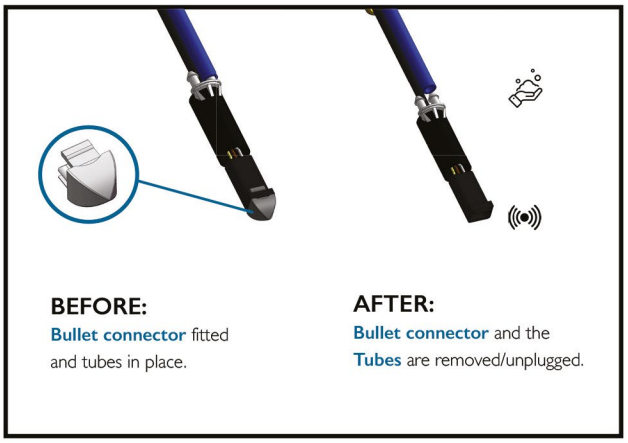

BEFORE:
Bullet connector fitted and tubes in place.

AFTER:
Bullet connector and the **Tubes** are removed/unplugged.

Step 4

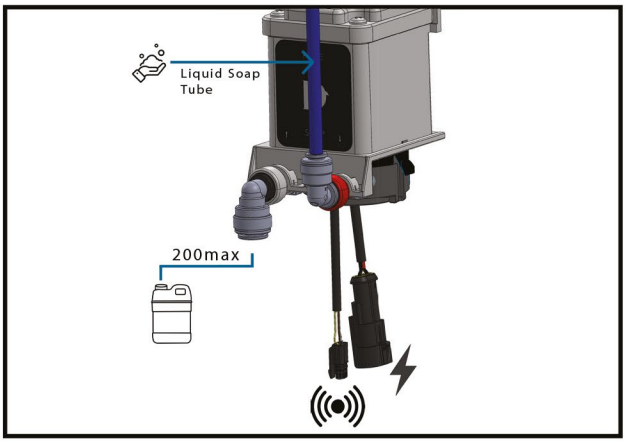

Step 5

› Switch on power supply - see page 6 for options

› The Sensor is self adjusting.

Further adjustments can be made by purchasing the Bluetooth Adaptor and downloading the App

Power Supply Options:
26001 (is a universal adaptor, the user will get all regions pins with the one adaptor).
26004 Hardwire psu

Step 6

Prime the soap line by pressing the Prime button until soap is expelled from the dispenser

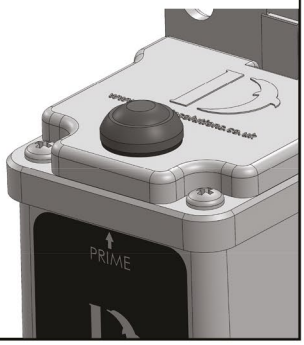

SOAP CONTAINER OPTIONS

1 Litre - Multi Feed

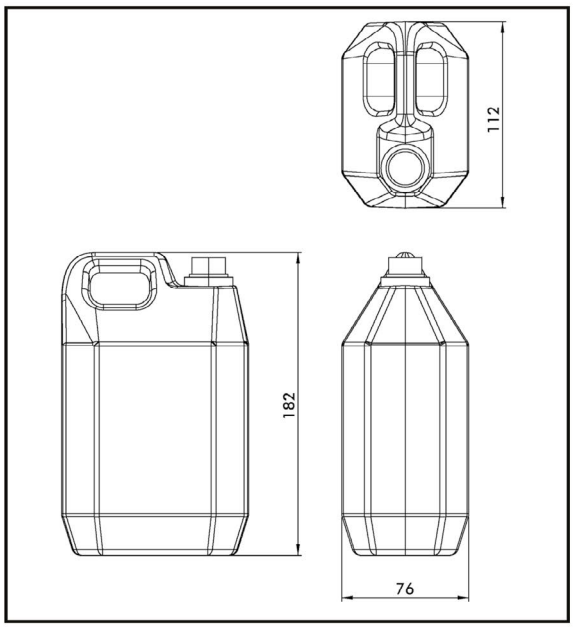

2 Litre - Multi Feed

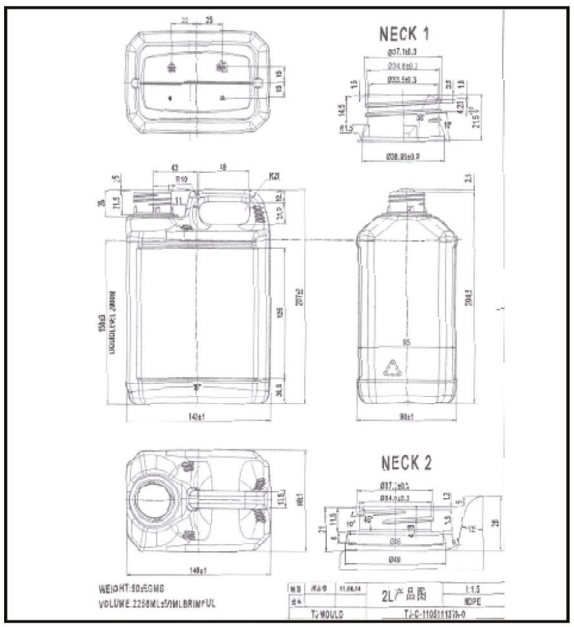

5 Litre - Multi Feed

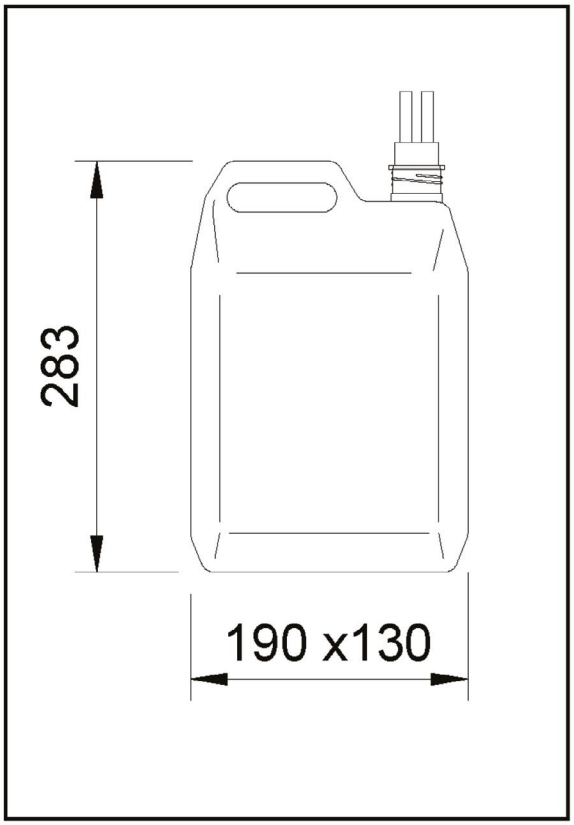

MAINTENANCE

DO NOT use steel wool or cleansing agents containing alcohol, acid, abrasives or the like. Use of any prohibited cleaning or maintenance products or substances could damage the surface of the tap. For surface cleaning of Soap Dispenser use ONLY soap and water then wipe dry with a clean soft cloth. Protect Soap Dispenser from splattering of harsh cleaners when cleaning surroundings.

POWER SUPPLY OPTIONS

MAINS ADAPTOR PRODUCT CODE 26001

- Input voltage: 100 240V AC +/- 10%, 50 - 60 Hz
- Output voltage: 12V DC 1.0A 12.0W
- Standby Power Consumption 0.1W
- OUTPUT RIPPLE @At 20MHz, and output parallel a 47uF/50V electrolytic capacitors and a 0.1uF/50V ceramic capacitors 300mVp-p
- Certifications: IEC/EN62368
- 1m Cable

HARDWIRE POWER SUPPLY PRODUCT CODE 26004

- Input voltage: 100 240V AC +/- 10%, 50 - 60 Hz
- Output voltage: 12V DC 1.0A 12.0W
- @At 20MHz, and output parallel
- Certifications:
- 1m Cable to m Cable (to Mains)

BLUETOOTH ADAPTOR PRODUCT CODE 26040

Bluetooth® version 4.0

The of the app required for using the system must be installed on the control unit in advance. The App is available for free in the iTunes Store (requires an Apple account) and the Google Play store (requires a Google account).

For operation under adverse environments, in buildings / rooms with reinforced concrete walls, steel and iron frame, or near obstructions (eg furniture) made from metal, the Bluetooth reception can be disturbed and interrupted.

Bluetooth®
Power consumption: Less than 25mA
Output: Bluetooth - Class 2
Bluetooth - version: 4.0
Bluetooth - Transmission distance: about 10m (depending on the environments)
Automatic safety shut-off: (10/20/60 seconds - adjustable) 20 s
Run-on time (0 - 10 s adjustable): 1s
Detection Range - Levels 1 to 10 (10 = 120mm approx) 10