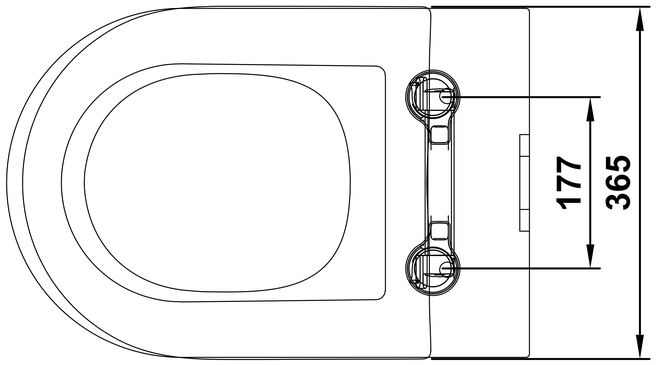

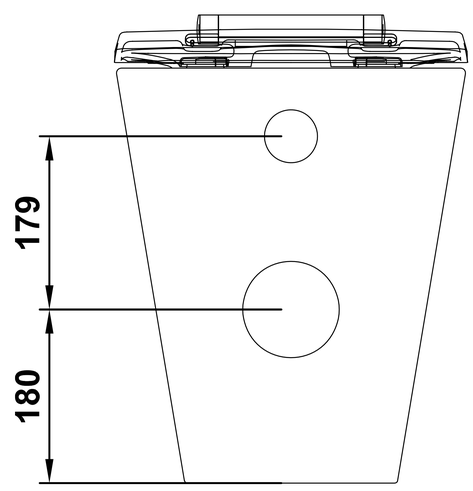

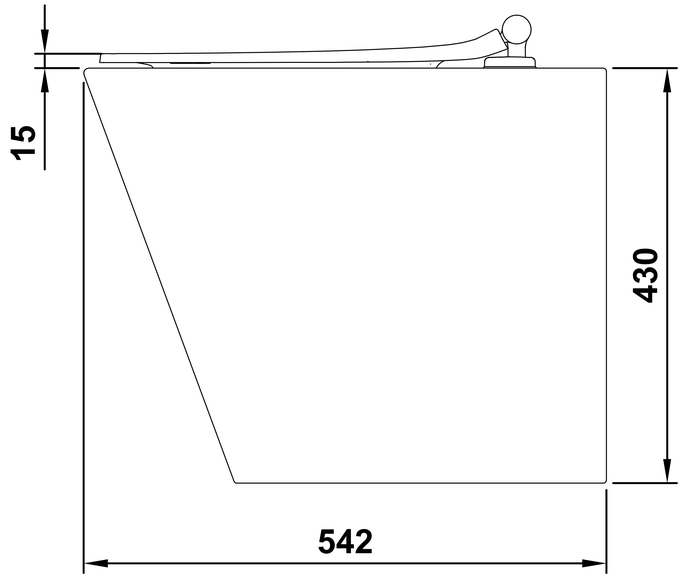

DOLPHIN SOLUTIONS LIMITED

DOLPHIN HEAVY DUTY WC SET FLOOR MOUNTED

DC2012

DOLPHIN