DOLPHIN



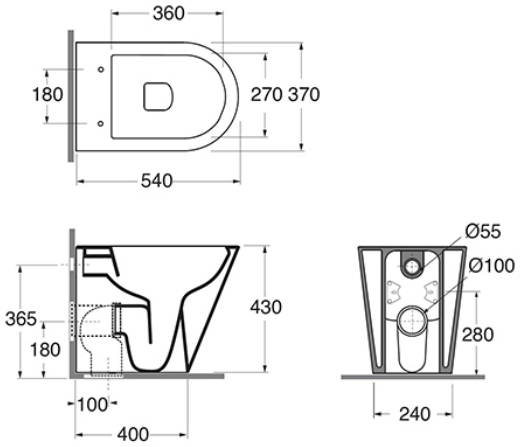

DC2012

DOLPHIN HEAVY DUTY WC SET FLOOR MOUNTED

› White floor mounted WC pan with ring seat for high traffic washrooms
› White seat option – Code: DC2012
› Black seat option – Code: DC2017
› Compatible with all frameless Dolphin cisterns and flush plates
› Clean white gloss finish WC pan
› No lid
› WC Weight tested to 400kg
› Maximum tested seat load of 240kg
› Cistern compatibility - DB5510.P / DB5510.M / DB5510.E
› Not compatible with framed cisterns
› Black seat option available to provide the seat-to-pan visual contrast recommended by Approved Document T.
› WC with Heavy duty D-shaped Duroplast seat with biocide silver chloride to prevent the growth of bacteria
› Built-in soft close function with durable hydraulic dampers with stainless steel damper casings and thermoplastic parts
› Robust mounts/hinges which are a combination of stainless steel and thermoplastic
› Wall hung heavy duty WC set available with white and black seat options: DC2011
› Recommended Applications for a Heavy Duty WC and Seat
› Public toilets
› Shopping centres
› Transport hubs
› Schools and education facilities
› Leisure and sports facilities
› High-traffic commercial washrooms

PROJECTION	**535MM**
HEIGHT	**300MM**
WIDTH	**371MM**

PRODUCT CODES

DC2012 - White seat option
DC2017 - Black seat option