DOLPHIN



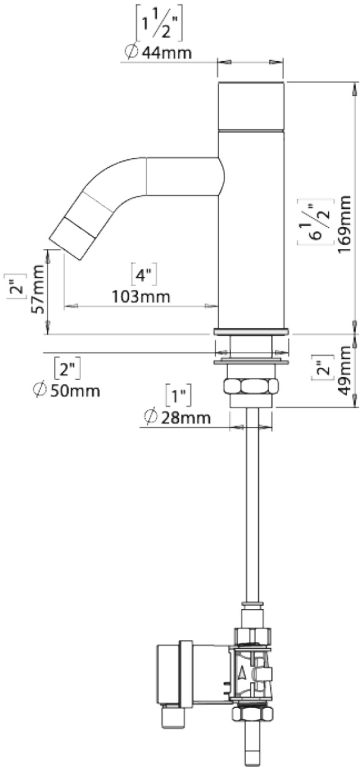

DB180 / DB185

DOLPHIN COUNTER MOUNTED INFRARED TAP

› Concealed sensor integrated within spout for ease of use and minimalist appearance
› Water Supply: single inlet cold or pre-mixed – a TMV2 or TMV3 thermostatic mixing valve is recommended for premixed applications
› Max nominal flow rate of 3.5LPM (between 1 and 6 bar) as standard, and is also available with 1.25LPM and 1.75LPM flow rates on special request
› Our low flow taps are fully BREEAM compliant and contribute to up to five BREEAM WAT 1 credits.
› Flow time once user's hands are removed from the tap – 1 second (adjustable by using remove control DB51)
› 1/2 BSP water supply connector
› Power Source: Plug-in 9 Volt transformers or 9 Volt Battery (with low battery warning)
› Hygiene flush feature runs the tap for 25 seconds, 24 hours after the last use of the tap. This flush time or 24 hours interval cannot be changed and is not based on real time, the feature can only be switched on or off using a compatible remote control(DB51). Taps are supplied with this feature switched on
› 2 year manufacturer's warranty
› Maximum water temperature 70°C
› Power connections: tap: male / power source: female
› Compatible with Dolphin AL0220 TMV3 thermostatic mixing valve

WIDTH	**44MM**
HEIGHT	**169MM**
PROJECTION	**103MM**

PRODUCT CODES

DB180C - Battery Polished Finish
DB185C - Transformer Polished Finish
DB180.5.xx - Battery Powder Coating Finish
DB185.5.xx - Transformer Powder Coating Finish
DB180-316 - Battery 316 Stainless Steel
DB185-316 - Transformer 316 Stainless Steel

TECHNICAL HELPLINE 01424 202224
DOLPHINSOLUTIONS.COM